BRYSTON .5B PREAMP REV. 4-85

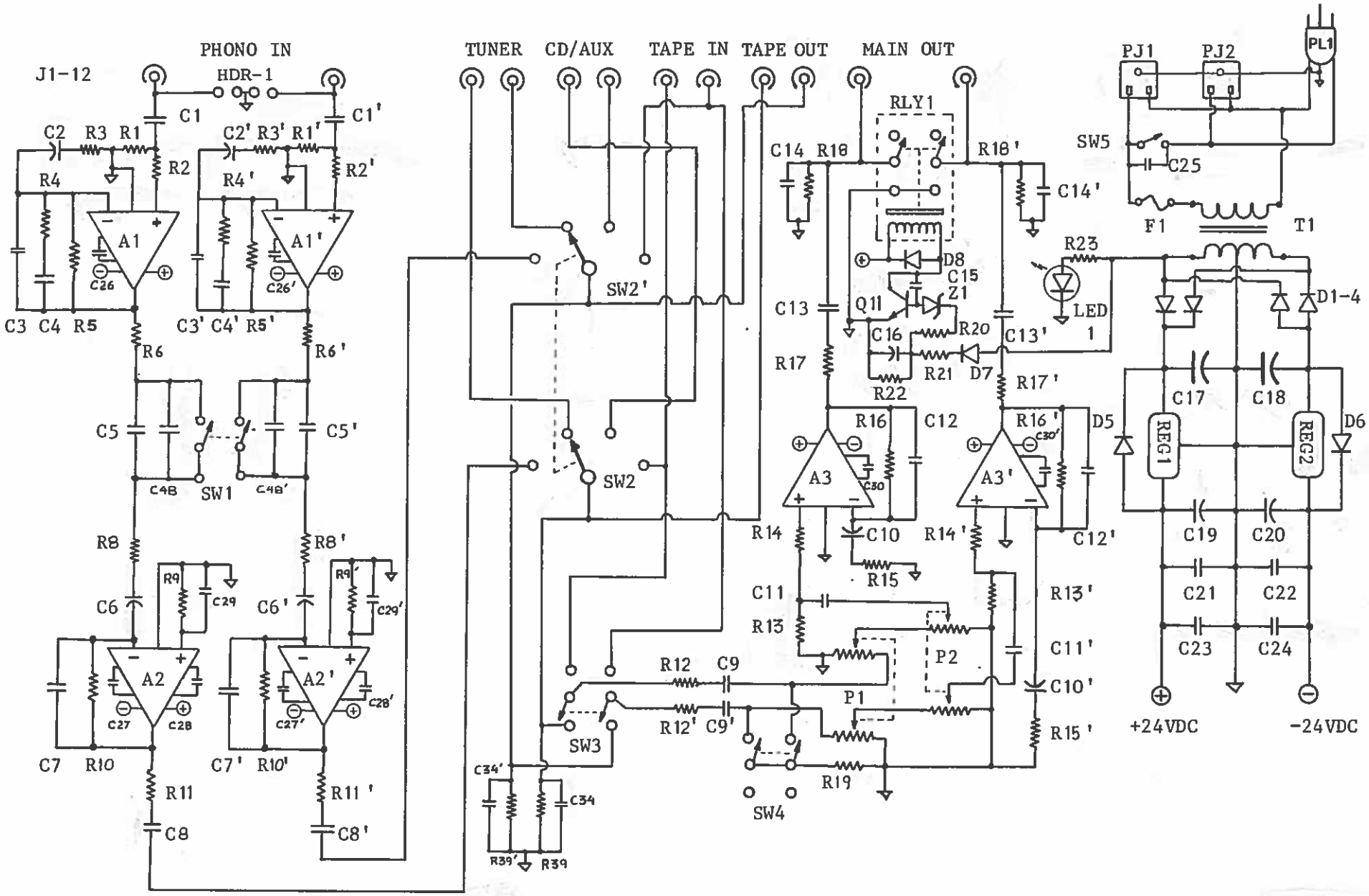

diag.rev.2 6 JUNE 85
3 19 DEC 85